EPD OPTIMIZATION SUMMARY

The full EPD Optimization Report is available in the document with Unique Document ID 2026/PA 472.

Coated Aluminium Profiles

Product-stage life-cycle comparison · 2022 vs 2026 EPD

GWP · A1 - A3

−46%

embodied carbon per kg

Embodied carbon, nearly halved. And it counts for LEED.

Between the 2022 and 2026 declarations, product - stage GWP dropped 46%, with reductions above 5% across well beyond two further impact categories - and both EPDs were confirmed comparable under ISO 14025:2006.

↓ 6 categories improved

ISO 14025:2006 comparable

Manufacturer	Europa Profil Aluminium S.A. - Inofita, Greece
Current EPD	EPD-IES-0006160:003 (S-P-06160) at EPD International —2026 declaration (2024 primary data)
Reference (Baseline) EPD	EPD-IES-0006160:001 (S-P-06160) - 2022 declaration (2020 primary data)
Comparison Type	Current EPD vs. previously published (baseline) EPD
Scope of Comparison	Cradle-to-Gate, Product Stage (A1-A3) shown below; full study also covers Modules C3, C4 and D
LEED Credit	LEED v4.1 MR credit: Environmental Product Declarations, Option 2 - Embodied Carbon/LCA Optimization (2-product equivalency)
Period of Validity	2026-08-03 - 2027-06-26

Impact category comparison

A1 - A3 · per kg

Impact Category	Unit	2022 Baseline	2026 Current	Change
GWP	kg CO_2 eq	1.26E+01	**6.72E+00**	↓ 46%
ODP	kg CFC-11 eq	9.30E-07	**4.19E-07**	↓ 55%
AP	mol H+ eq	8.72E-02	**4.77E-02**	↓ 45%
EP	kg PO4-3 eq	1.77E-02	**1.14E-02**	↓ 36%
POCP	kg NMVOC eq	3.97E-02	**2.17E-02**	↓ 45%
ADPf	MJ	1.34E+02	**7.34E+01**	↓ 45%

GWP = Global Warming Potential; ODP = Ozone Depletion; AP = Acidification; EP = Eutrophication; POCP = Photochemical Ozone Creation; ADPf = Abiotic Depletion (fossil). Modules C3, C4 & D covered in the full assessment. assessment.

Embodied carbon comparison

GWP, kg CO_2-eq / kg

Where the reduction comes from

The improvement traces to a higher share of recycled (secondary) aluminium in the raw-material mix. Because primary aluminium is far more energy- and carbon-intensive than remelting scrap, this sourcing shift cut product-stage impacts **with no change to extrusion, coating, finishing, or the product's technical performance.**

SECONDARY MATERIAL

↑254%

0.142 → 0.502 kg per functional unit

LEED Credit Achievement

Contributes to **LEED v4.1 MR credit: Environmental Product Declarations, Option 2 - Embodied Carbon/LCA Optimization**, at two - product (2 products) equivalency - GWP reduction ≥20% with reductions >5% in two or more additional impact categories.

Verifier:

Business Quality Verification P.C.

Signature: *Date:* 2026-08-03

Coated Aluminium Profiles
EPD Optimization Report

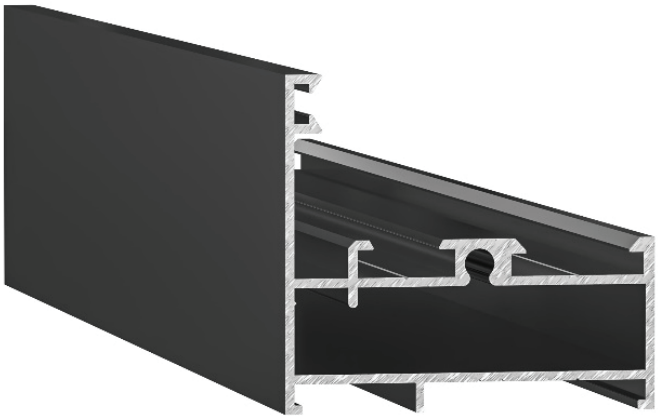

Date of Issue:	2026-08-03
Date of Expiration:	2027-06-26
Unique Document ID:	2026/PA 472

PRODUCT INFORMATION

Manufacturer Name	Europa Profil Aluminium S.A.
Address	56th km N.R. Athens – Lamia, 32011 Inofita - Viotia
Contact information	T: (+30) 22624 40000 info@europaprofil.com www.europaprofil.com
Product Name	Coated Aluminium Profiles

IMPACT COMPARISON PARAMETERS

Type of Comparison	Current EPD vs Baseline EPD
Current EPD	EPD-IES-0006160:003 (S-P-06160) https://www.environdec.com/library/epd6160
Expiration date of Current EPD	2027-06-26
LCA Practitioner of Current EPD	Europa Profil Aluminium S.A.
Baseline EPD	EPD-IES-0006160:001 (S-P-06160) https://www.europaprofil.com/wp-content/uploads/EPD_Coated-aluminium-profile_Europa.pdf
Expiration date of Baseline EPD	2027-06-26
LCA Practitioner of Baseline EPD	Envirometrics S.A.
Scope of comparison / Life Cycle Stages Reviewed	Cradle to Gate with Modules C and D (A1–A3, C and D)
Functional Unit	1 kg of Coated Aluminium Profiles manufactured in Europa Plant located at Inofita, Greece

INDEPENDENT VERIFICATION OF THE OPTIMIZATION REPORT

Business Quality Verification P.C. carried out the independent third-party verification of the Optimization Report

BUSINESS QUALITY VERIFICATION BQV

Business Quality Verification P.C.,
5 Konitsis street, Marousi, GR 15125, Greece

info@bqv.gr • www.bqv.gr

SUSTAINABILITY CONSULTANCY

DCARBON
Decarbonize your world!

DCarbon, 20 Amerikis str 106 71, Athens, Greece

sustainability@dcarbon.co • https://dcarbon.co/

Date of Issue	2026-08-03
Date of expiration	2027-06-26

Third Party Verification Statement

It is Business Quality Verification P.C.'s professional opinion that the document in question meets the following LEED v4.1 credit criteria:

LEED v4.1 BD+C — MRc: Environmental Product Declarations, Option 2: Embodied Carbon/LCA Optimization.

☒ GWP Reduction ≥ 20% and ≥ 5% reduction in two or more Additional Impact Categories (value as 2 products for LEED v4.1)

This conclusion was reached for the following reasons:

- A comparison of the underlying LCAs and EPDs was conducted; the two EPDs were confirmed to be comparable for the purposes of LEED credit achievement (equivalent functional unit, system boundary, data sources, PCR, software, and calculation methodology).
- The comparison demonstrated a GWP-total reduction of at least 20%, together with reductions greater than 5% in at least two additional impact categories, relative to the baseline EPD.

Verifier: Business Quality Verification P.C.
5 Konitsis street, Marousi, GR 15125, Greece. info@bqv.gr • www.bqv.gr

Name of Representative: *Dimitra Barbagianni*
Signature:

Date: *2026-08-03*

Executive Summary

Europa Profil Aluminium S.A. has updated the Environmental Product Declaration (EPD) for its Coated Aluminium Profiles, replacing the 2022 EPD (based on 2020 primary manufacturing data) with a 2026 EPD (based on 2024 primary manufacturing data). This report presents a comparative life cycle assessment (LCA) of the two EPDs, documents the production changes responsible for the observed improvements, and evaluates the resulting environmental benefits.

Headline result: the 2026 EPD shows a **46% reduction in GWP-total** for the product stage (Modules A1–A3), together with reductions greater than 5% in more than two additional impact categories, relative to the 2022 EPD. The principal driver of this improvement is an increase in recycled (secondary) aluminium content used in manufacturing.

This performance has been independently verified by Business Quality Verification P.C. and satisfies the requirements of LEED v4.1 MR credit Environmental Product Declarations, Option 2 Embodied Carbon/LCA Optimization.

A. Introduction

This report was prepared by Europa Profil Aluminium S.A., together with its sustainability consultant, DCarbon, to document and substantiate the environmental performance improvements achieved between two successive EPDs for the same product: Coated Aluminium Profiles manufactured at Europa's Inofita plant, Greece.

The report is structured to provide: a technical description of the product and underlying data; the methodology used to assess and compare the two EPDs; documentation of the changes in raw material inputs; a comparative table of environmental performance indicators; a comparative analysis of results; an assessment of the environmental benefits achieved; and overall conclusions.

This assessment also serves as supporting documentation for project teams pursuing LEED v4.1 MR credit Environmental Product Declarations, Option 2 Embodied Carbon/LCA Optimization.

B. Technical Description of the Products and Associated Data

Both EPDs compared in this report declare the same product — Coated Aluminium Profiles manufactured at Europa's Inofita plant — under the same functional unit, product category rule, and declared scope, which is a precondition for a valid like-for-like comparison. The key product and declaration data are summarized below.

Manufacturer Name	Europa Profil Aluminium S.A.
Manufacturing Site	56th km N.R. Athens - Lamia, 32011 Inofita, Viotia, Greece
Contact Information	T: (+30) 22624 40000 • info@europaprofil.com • www.europaprofil.com
Product Name	Coated Aluminium Profiles
Product Description	Extruded aluminium profiles, surface-coated, used in building systems (e.g., windows, doors, curtain walling). Thermal performance and durability are maintained across both EPD versions.
CPC Code	41532 - bars, rods, and profiles of aluminium
Functional / Declared Unit	1 kg of Coated Aluminium Profiles manufactured at the Europa plant, Inofita, Greece
2026 EPD (Current)	EPD-IES-0006160:003 (S-P-06160) - https://www.environdec.com/library/epd6160 - based on 2024 primary manufacturing data
2022 EPD (Baseline)	EPD-IES-0006160:001 (S-P-06160) - https://www.europaprofil.com/wp-content/uploads/EPD_Coated-aluminium-profile_Europa.pdf - published on www.europaprofil.com - based on 2020 primary manufacturing data
Program Operator	EPD International AB
Standards	ISO 14025:2006
Product Category Rule (PCR)	PCR 2019:14, Construction products (EN 15804:2012+A2:2019)
Life Cycle Stages / Modules Declared	Cradle to Gate with Modules C and D (A1–A3, C3, C4, and D)

The physical product (alloy system, cross-sectional design, coating type, and in-service thermal and mechanical performance) is unchanged between the two declarations. The improvements documented in this report therefore originate from the changes in raw material inputs, not from a change in the product itself or in its functional performance.

C. Methodology for the Assessment and Comparison of the EPDs

In accordance with the comparability requirements established in ISO 14025:2006, Section 6.7.2, the comparison between the 2022 and 2026 Environmental Product Declarations (EPDs) was conducted only after verifying that both declarations were developed using an equivalent methodological basis.

C1. Comparability Checks

- Equivalent functional/declared unit: 1 kg of Coated Aluminium Profiles manufactured at the same plant.
- Equivalent system boundary and life cycle modules declared (Modules A1–A3, C3, C4, and D - see table below).
- Equivalent Product Category Rule (PCR 2019:14, 'Construction products', EN 15804:2012+A2:2019) and CPC code (41532).
- Equivalent background data source for the end-of-life stage (Ecoinvent v.3.7.1) used in both models.
- Equivalent LCA software (OpenLCA v.1.10.3) and calculation approach.
- Equivalent underlying standards (ISO 14025:2006; EN 15804:2012+A2:2019).

Because these parameters are held constant between the two studies, differences in the reported results are attributable to actual changes in the production system (primarily raw material sourcing), rather than to methodological artifacts.

C2. Life Cycle Stages Reviewed

	Product Stage	End of Life Stage	Resource Recovery Stage
Modules	A1 - Raw Materials Supply A2 - Transport A3 - Manufacturing	C1 - De-construction and demolition C2 - Transport C3 - Waste processing for reuse, recovery and/or recycling C4 - Disposal	D - Reuse-Recovery-Recycling potential

C3. Comparison Approach

For each declared impact and resource-use indicator, the module-level results (A1–A3, C3, C4, D) of the 2026 EPD were compared against the corresponding module-level results of the 2022 EPD, and the percentage change was calculated for each module. This module-level approach isolates where in the life cycle the change occurs (e.g., the product stage vs. the end-of-life stage) rather than only comparing aggregated totals.

C4. Independent Verification

The comparability of the two EPDs and the resulting optimization determination were independently reviewed by Business Quality Verification P.C., in accordance with ISO 14025:2006.

D. Changes in Production Process, Raw Materials, and Other Relevant Parameters

Europa Profil Aluminium S.A. continues to invest in increasing the recycled (secondary) aluminium content used in its manufacturing process, as part of its strategy to reduce the embodied carbon of its products, support circular economy principles, and work toward carbon neutrality by 2050.

Documented change: the LCA input data show that the Use of Secondary Material (SM) in the product stage increased from **0.142 kg to 0.502 kg** per functional unit (a 254% increase) between the 2022 and 2026 declarations — i.e., a materially higher proportion of recycled aluminium scrap was substituted for primary aluminium in the raw material mix.

This shift in raw material sourcing is the documented cause of the reduction in embodied carbon reported in this assessment: primary aluminium production is significantly more energy- and carbon-intensive (via bauxite mining and electrolytic smelting) than secondary aluminium production (via scrap remelting), so increasing the recycled content of the raw material input directly reduces upstream (Module A1–A3) impacts without requiring any change to the extrusion, coating, or finishing processes downstream.

The product's technical specification, alloy performance class, coating system, and in-service durability are unchanged, confirming that the improvement is attributable to the raw material input mix rather than to a change in the product itself.

Scope note: the underlying LCA documentation reviewed for this report does not itemize additional process changes beyond the increased recycled content (e.g., specific changes to energy mix, transport logistics, or on-site process efficiency). If such changes also occurred, they are not separately quantified in the source EPDs and are therefore not claimed here. This is discussed further in Section F in relation to categories where results moved in the opposite direction (e.g., ADPe, HWD).

E. Assessment of Impact Results

Assessment Results

The tables below present the full set of declared environmental performance indicators for both EPDs, broken down by life cycle module (A1–A3, C3, C4, D), together with the percentage change between the 2022 and 2026 declarations.

Environmental Impacts

		Current EPD				Baseline EPD				Impact Change			
Environmental Impacts	**Unit**	**A1 - A3**	**C3**	**C4**	**D**	**A1 - A3**	**C3**	**C4**	**D**	**A1 - A3**	**C3**	**C4**	**D**
GWP – Total	kg CO2 eq	6,72E+00	6,69E-01	4,27E-02	-2,97E+00	1,26E+01	6,55E-01	5,63E-02	-5,88E+00	**-46%**	**2%**	**-24%**	**-50%**
GWP - Fossil	kg CO2 eq	6,62E+00	6,61E-01	4,27E-02	-2,89E+00	1,24E+01	6,48E-01	5,62E-02	-5,73E+00	**-46%**	**2%**	**-24%**	**-50%**
GWP - Biogenic	kg CO2 eq	2,89E-02	6,55E-03	1,58E-05	-1,05E-02	4,33E-02	6,41E-03	1,68E-05	-2,09E-02	**-33%**	**2%**	**-6%**	**-50%**
GWP - Luluc	kg CO2 eq	7,82E-02	5,38E-04	6,51E-06	-6,44E-02	1,60E-01	5,27E-04	7,49E-06	-1,28E-01	**-51%**	**2%**	**-13%**	**-50%**
GWP - GHG	kg CO2 eq	6,46E+00	6,56E-01	4,20E-02	-2,82E+00	1,16E+01	6,42E-01	5,54E-02	-5,59E+00	**-44%**	**2%**	**-24%**	**-50%**
ODP	kg CFC-11 eq	4,19E-07	5,09E-08	1,60E-09	-2,08E-07	9,30E-07	4,99E-08	2,01E-09	-4,13E-07	**-55%**	**2%**	**-20%**	**-50%**
AP	mol H+ eq	4,77E-02	4,07E-03	4,43E-05	-2,33E-02	8,72E-02	3,99E-03	5,07E-05	-4,62E-02	**-45%**	**2%**	**-13%**	**-50%**
EP - Freshwater	kg PO4-3 eq	1,14E-02	2,14E-03	4,22E-06	-2,59E-03	1,77E-02	2,09E-03	4,42E-06	-5,13E-03	**-36%**	**2%**	**-5%**	**-50%**
EP - Freshwater	kg P eq	3,71E-03	6,97E-04	1,38E-06	-8,44E-04	5,78E-03	6,83E-04	1,44E-06	-1,67E-03	**-36%**	**2%**	**-5%**	**-50%**
EP - Marine	kg N eq	6,85E-03	7,65E-04	1,06E-05	-2,93E-03	1,23E-02	7,49E-04	1,20E-05	-5,80E-03	**-44%**	**2%**	**-12%**	**-50%**
EP - Terrestrial	mol N eq	6,97E-02	9,21E-03	1,15E-04	-2,95E-02	1,24E-01	9,03E-03	1,31E-04	-5,85E-02	**-44%**	**2%**	**-12%**	**-50%**
POCP	kg NMVOC eq	2,17E-02	2,36E-03	3,46E-05	-1,01E-02	3,97E-02	2,31E-03	3,96E-05	-2,00E-02	**-45%**	**2%**	**-12%**	**-50%**
ADPe	kg Sb eq	1,18E-04	1,78E-04	1,87E-08	6,67E-05	5,36E-05	1,74E-04	2,21E-08	1,32E-04	**121%**	**2%**	**-16%**	**-50%**
ADPf	MJ	7,34E+01	7,61E+00	1,30E-01	-2,70E+01	1,34E+02	7,46E+00	1,56E-01	-5,35E+01	**-45%**	**2%**	**-17%**	**-50%**
WDP	m3 eq	4,10E+00	6,17E-01	2,43E-03	-2,18E+00	7,10E+00	6,05E-01	2,64E-03	-4,32E+00	**-42%**	**2%**	**-8%**	**-50%**

Resource Use

		Current EPD				Baseline EPD				Impact Change			
Resource Use	**Unit**	**A1 - A3**	**C3**	**C4**	**D**	**A1 - A3**	**C3**	**C4**	**D**	**A1 - A3**	**C3**	**C4**	**D**
PERE	MJ	3,01E+01	1,14E+00	4,06E-03	-2,23E+01	5,88E+01	1,12E+00	4,23E-03	-4,41E+01	**-49%**	**2%**	**-4%**	**-50%**
PERT	MJ	3,01E+01	1,14E+00	4,06E-03	-2,23E+01	5,88E+01	1,12E+00	4,23E-03	-4,41E+01	**-49%**	**2%**	**-4%**	**-50%**
PENRE	MJ	7,34E+01	7,61E+00	1,30E-01	-2,70E+01	1,34E+02	7,46E+00	1,56E-01	-5,35E+01	**-45%**	**2%**	**-17%**	**-50%**
PENRT	MJ	7,34E+01	7,61E+00	1,30E-01	-2,70E+01	1,34E+02	7,46E+00	1,56E-01	-5,35E+01	**-45%**	**2%**	**-17%**	**-50%**
SM	kg	5,02E-01	0,00E+00	0,00E+00	0,00E+00	1,42E-01	0,00E+00	0,00E+00	0,00E+00	**254%**	**-**	**-**	**-**
FW	m3	9,56E-02	1,44E-02	5,66E-05	-5,08E-02	1,65E-01	1,41E-02	6,15E-05	-1,01E-01	**-42%**	**2%**	**-8%**	**-50%**

Output Flows and Waste Categories

		Current EPD				Baseline EPD				Impact Change			
Output Flows and Waste Categories	**Unit**	**A1 - A3**	**C3**	**C4**	**D**	**A1 - A3**	**C3**	**C4**	**D**	**A1 - A3**	**C3**	**C4**	**D**
HWD	kg	4,44E-03	7,48E-03	6,52E-07	3,06E-03	1,32E-03	7,33E-03	8,61E-07	6,05E-03	**237%**	**2%**	**-24%**	**-50%**
NHWD	kg	2,06E+00	2,05E-01	1,31E-01	-1,11E+00	3,75E+00	2,01E-01	1,40E-01	-2,20E+00	**-45%**	**2%**	**-6%**	**-50%**
RWD	kg	2,55E-04	2,46E-05	7,28E-07	-1,29E-04	4,57E-04	2,41E-05	9,06E-07	-2,56E-04	**-44%**	**2%**	**-20%**	**-50%**

F. Comparative Analysis of Results: 2022 EPD (Baseline) vs 2026 EPD (Optimized)

F1. Product Stage (Modules A1-A3)

The product stage shows the largest and most consistent improvement across the indicator set. GWP - total fell by 46%, with comparable double-digit reductions (33–55%) across GWP-fossil, GWP-biogenic, GWP-luluc, ODP, AP, the eutrophication indicators, POCP, ADPf, and WDP. Resource-use indicators PERE/PERT and PENRE/PENRT fell by 45–49%, and non-hazardous waste disposed (NHWD) fell by 45%. This pattern is consistent with a raw-material-driven improvement, since Module A1–A3 is precisely where raw material extraction and primary processing are accounted for.

Two categories move in the opposite direction at the product stage: ADPe (abiotic depletion, non-fossil resources) increased 121%, and HWD (hazardous waste disposed) increased 237%. Both are linked to the same underlying change — a larger share of scrap-based secondary aluminium in the input mix — since scrap collection, sorting, and remelting can shift resource-depletion and hazardous-waste burdens relative to primary metal production, even as it lowers carbon and energy indicators.

F2. Waste Processing for Recycling (Module C3)

Module C3 results are essentially unchanged between the two declarations (a uniform +2% across nearly all indicators). This is expected, since C3 reflects the end-of-life waste-processing stage, which was modeled with the same background end-of-life data (Ecoinvent v.3.7.1) and is not affected by the upstream raw-material change described in Section D.

F3. Disposal (Module C4)

Module C4 shows moderate reductions across most indicators (roughly -4% to -24%), generally smaller than the product-stage reductions. As with C3, this module is governed primarily by end-of-life modeling assumptions rather than by the raw-material change, so the smaller and more variable magnitude of change is consistent with expectations.

F4. Resource Recovery Potential (Module D)

Module D shows a uniform -50% change across every indicator for which it is reported. Because this uniformity spans categories with very different underlying physical mechanisms (climate, toxicity, resource depletion, water use), it indicates a systematic change in the end - of - life recycling - credit calculation basis (e.g., the assumed net scrap output or substitution ratio used to credit Module D), rather than a category-specific environmental effect. Confirming the precise basis for this change would require the underlying LCA background documentation, which is outside the scope of the two EPDs reviewed.

F5. Secondary Material Input

The Use of Secondary Material (SM) indicator increased 254%, from 0.142 kg to 0.502 kg per functional unit - the single largest relative change in the dataset, and the data point that directly corroborates the raw-material change described in Section D.

G. Conclusions and Overall Assessment

This report has presented a technical description of Europa's Coated Aluminium Profiles, the methodology used to compare the 2022 and 2026 EPDs, the documented production change (increased recycled aluminium content) responsible for the improved performance, the full comparative indicator dataset, and an analysis of the resulting environmental benefits and trade-offs.

The comparison confirms that the 2026 EPD achieves a GWP-total reduction of 46% for the product stage, together with reductions greater than 5% in considerably more than two additional impact categories, relative to the 2022 EPD. This result has been independently verified by Business Quality Verification P.C. and meets the requirements of LEED v4.1 MR credit Environmental Product Declarations, Option 2 Embodied Carbon/LCA Optimization, at two-product equivalency.

Project teams may cite this report, together with the two underlying EPDs referenced in Appendix B, as documentation for LEED v4.1 MRc2 Option 2 credit achievement.

Appendix A. List of Abbreviations

GWP-total	Global Warming Potential total
GWP-fossil	Global Warming Potential fossil
GWP-biogenic	Global Warming Potential biogenic
GWP-luluc	Global Warming Potential land use and land use change
ODP	Ozone Depletion Potential
AP	Acidification Potential
EP-freshwater	Eutrophication potential, fraction of nutrients reaching freshwater end compartment
EP-marine	Eutrophication Potential fraction of nutrients reaching marine end compartment
EP- terrestrial	Eutrophication potential, Accumulated Exceedance
POCP	Formation potential of tropospheric ozone photochemical oxidants
ADPe	Abiotic depletion potential for non-fossil resources
ADPf	Abiotic depletion potential for fossil resources
WDP	Water use
PERE	Use of renewable primary energy excluding resources used as raw materials
PERM	Use of renewable primary energy resources used as raw materials
PERT	Total use of renewable primary energy resources
PENRE	Use of non-renewable primary energy excluding resources used as raw materials
PENRM	Use of non-renewable primary energy resources used as raw materials
PENRT	Total use of non-renewable primary energy resources
SM	Use of secondary material
RSF	Use of renewable secondary fuels
NRSF	Use of non-renewable secondary fuels
FW	Use of net fresh water
HWD	Hazardous waste disposed
NHWD	Non-hazardous waste disposed
RWD	Radioactive waste disposed
CRU	Components for re-use
MFR	Materials for recycling
MER	Materials for energy recovery
EE	Exported Energy
PM	Particulate matter emissions
IRP	Ionizing radiation, human health
ETP-FW	Ecotoxicity, freshwater
HTP-c	Human toxicity, cancer
HTP-nc	Human toxicity, non-cancer
SQP	Land use related impacts/Soil quality

Appendix B. Document References

- **Current EPD** - EPD-IES-0006160:003 (S-P-06160):
  https://www.environdec.com/library/epd6160

- **Baseline EPD** - EPD-IES-0006160:001 (S-P-06160):
  https://www.europaprofil.com/wp-content/uploads/EPD_Coated-aluminium-profile_Europa.pdf

- **Sustainability Consultant** - DCarbon, 20 Amerikis str., 106 71 Athens, Greece:
  sustainability@dcarbon.co · *https://dcarbon.co/*

- **Verifier** - Business Quality Verification P.C., 5 Konitsis street, Marousi, GR 15125, Greece:
  info@bqv.gr · *www.bqv.gr*

Factory - Head Offices

56th km N.R. Athens - Lamia
32011 Inofita - Viotia
T: 22624 40000

info@europaprofil.com

www.europaprofil.com

ALUMINIUM SYSTEMS